Vedder ESC for DC and BLDC motors

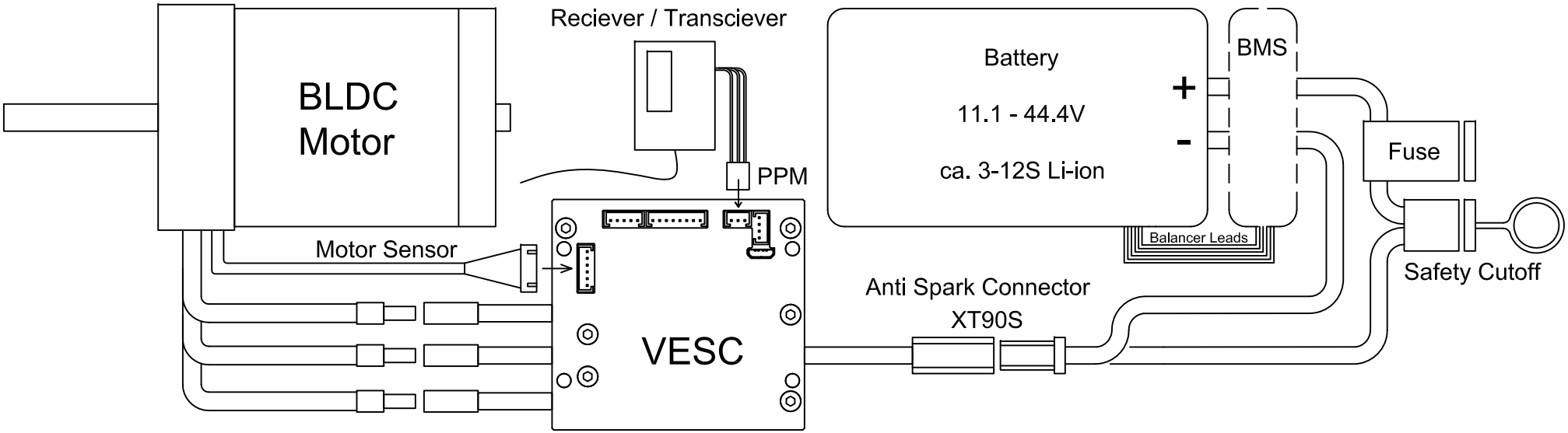

WARNING: Read the ENTIRE instruction manual to become familiar with the device and its features before operating. Failure to operate the product correctly and safely may result in damage to the product, personal property and cause serious injury.

This product must be operated with caution, common sense and in harmony with any regulations in place. Usage requires some basic mechanical and electrical ability. Failure to operate this Product in a safe and responsible manner could result in injury or damage to the product or other property. This product is not intended for use by children. Do not attempt disassembly, use with incompatible components or augment product in any way without given approval by the manufacturer. This manual contains instructions for safety, operation and maintenance. It is essential to read and follow all the instructions and warnings in the manual, prior to assembly, setup or use, in order to operate correctly and avoid damage or serious injury. **Age Recommendation: Not for children under 16 years. This is not a toy.**

Throughout the literature the following terms will be used to indicate various levels of potential harm when operationg this device.

NOTICE : Procedures which, if not properly followed, create a possibility of physical property damage AND a little or no possibility of injury.

CAUTION : Procedures which, if not properly followed as described in this manual, create the probability of physical property damage AND a possibility of serious injury.

WARNING: Procedures which, if not properly followed, create the probability of property damage, collateral damage, and serious injury OR create a high probability of superficial injury.

WARNING: This device may not be used for applications requiring fulfillment of special safety standards. Among others this includes: Vehicles, aircrafts, certain machines and operation in safety critical environments like medical, nuclear and military!

Integrating your VESC into an electrical System:

Your VESC is designed to be integrated into a battery powerd electrical system only! The sketch above shows how to integrate your VESC-Controller into such a system. Minimum requirements for safe operation:

1. Integration of a **safety power cut-off.**
2. The integration of a **FUSE**, rated in accordance of your electrical system (weakest part of the system).
3. Use of a **compatible input device** (legal to operate, free of interference, reliable).
   Shown: *PPM (Pulse Position Modulated) 2.4GHz receiver*
4. Using safe setting for the operation in accordance with your electrical system and components involved.
5. Use a **B**attery **M**anagement **S**ystem (BMS) if the motor is used for regenerative braking or as a generator.
6. Follow general safety measures for your device/system, as legally required.

Safe Settings and Operation for Motor and Battery Settings (Motor Settings Panel, General):

WARNING: This device is intended to be used with the original Open Source Software *VESC-Tool.* Usage of other software than stated voids warranty and statement of conformance! This is a guide to set up your device within the measures of safe operation. Stay safe! To prevent injuries, operate your motor without attached propellers, wheels and/or moving mechanical parts when doing/changing your setup. Stay clear of any moving parts! Motor will spin up during setup! If you are not an expert, please use the Wizards for Setup! Additionally apply safe settings for the temperature cutoffs to prevent over heating.

- BLDC Mode:	Block Commution (Trapezoidal), more noise, less efficient, sometimes lesser likelihood to experience problems.
- FOC Mode:	Sinosoidal Commutation (Sine Wave), free of noise / vibrations, more efficient, more complex.
- Sensors:	Does your motor/ setup incorporates motor sensors? Do you want to use them? (Hall, ABI, AS 5047P Sensors) Did you check and adjust the sensor voltage (3.3 / 5V)?
- Battery Cutoff Start:	System decreases power usage when voltage drops below defined value, e.g. 3.4V per cell for LiPo (battery protection/health).
- Battery Cutoff End:	System stops motor when voltage drops below defined value, e.g. 3.1V per cell for LiPo (battery protection/health).
- Motor Current Max:	Defines maximum allowed Amp draw for the Motor. Can your motor cope with your setting? Does anything get hot during operation?
- Motor Current Max Brake:	Defines maximum allowed current being generated by the motor (regenerative braking). **Warning:** Wrong settings may overstress your motor/generator and/or battery! Read the warnings below!
- Absolute Maximum Current:	Max. Amp flow allowed in your electrical system (peak).
- Battery Current Max:	Max. allowed continuous current drain according to batteries technical data sheet. Read warning below!
- Battery Current Max Regen:	Max. current fed back into your battery pack. Check batteries data sheet to prevent dangers or battery damage. Read warnings below!
- MOSFET Temp Cutoff Start:	System decreases power usage when temperature reaches this value (default 80°C)
- MOSFET Temp Cutoff Start:	System stops motor operation when temperature reaches this value (default 100°C)
- MOTOR Temp Cutoff Start:	System decreases power usage when temperature reaches this value (default 80°C). Motor Temp sensors needed for this feature.
- MOTOR Temp Cutoff End:	System stops motor operation when temperature reaches this value (default 100°C). Motor Temp sensors needed for this feature.

Please visit *www.vesc-project.com/documentation* for more Information. **If you are unsure about any setting inform yourself or send us a message to prevent any danger. Start using values on the safe side and check if any part of your electrical system starts to heat up beyond safe limits of operation.**

Warning: When using the motor as a generator (e.g. as a regenerative motor brake), your battery will be charged with the setting found in ***Motor Settings >> General >> Current Tab*** of VESC-Tool. The ***Battery Current Max Regen*** value will define the maximum Ampflow pushed towards your battery when the motor is operated as a generator (e.g. during regenerative braking). Make sure your battery can handle the ampflow, as defined in the settings mentioned above. The maximum battery charge currents can be found in the batteries documentation and data sheets. **Never use your motor as a generator when your battery is fully charged**, especially if your battery is vulnerable to catch fire or explode when overcharged. **LITHIUM BATTERIES and other types of Batteries ARE potentially DANGEROUS!**
Depending on your application you may need to include a **B**attery **M**anagemant **S**ystem (BMS) to safely operate your battery and to give you feedback, when the battery is fully charged. Stop using the motor as a generator until your battery is discharged enough to cope with regenerative braking again. **Never drain more Amps** than your battery and/or motor can cope with (Max rating for continuous Amp flow). Use safe settings for all parameters found in the *Motor Settings >> General >> Current Tab!*

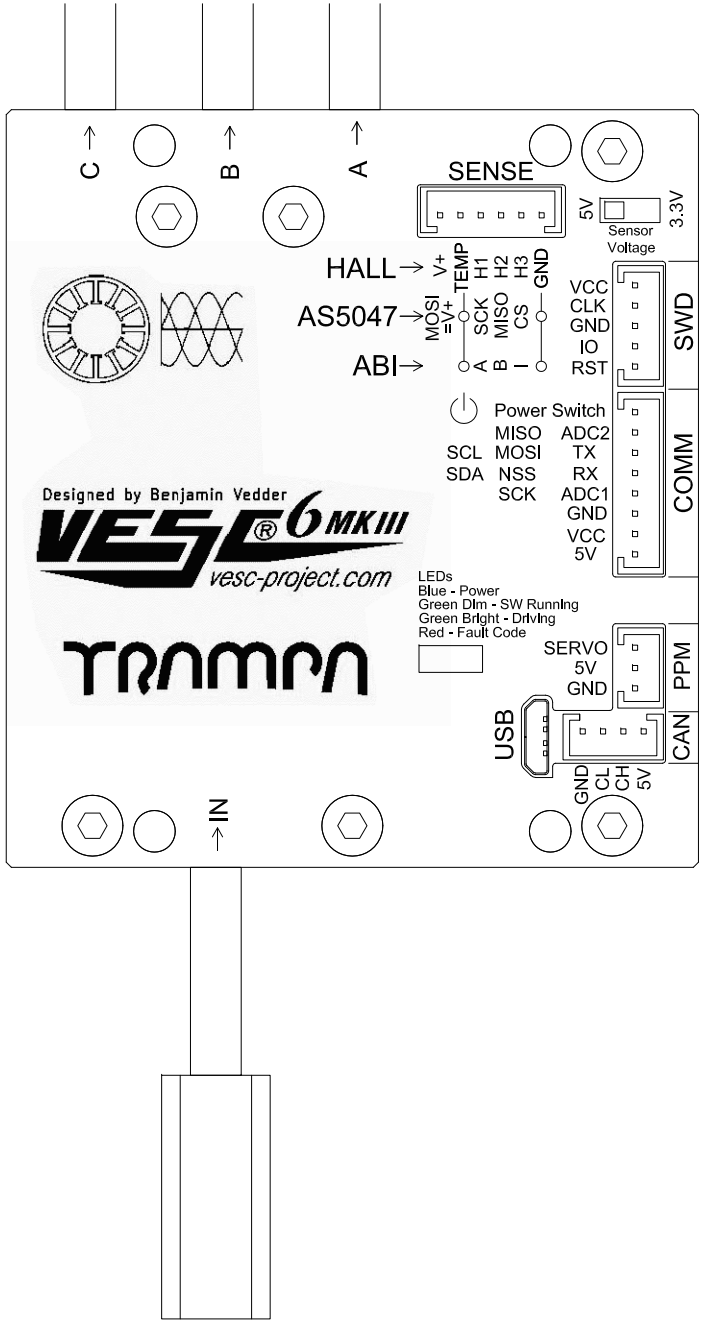

Connectors and Switches:

The VESC is equipped with USB, CAN-Bus, PPM, COMM, SWD and a SENSOR ports. The following List will give you an idea how to interconnect the VESC to other devices.

- Sensors: Sensor Port for **ABI, HALL or AS5047P motor position sensors**. Motor sensors allow precise and powerful rotation of the motors rotor from a random (standstill) position or from a defined position A to a defined position B.
Did you check and adjust the sensor voltage (3.3 / 5V)?
Did you check the wiring scheme of your sensor cable?

- SWD: **S**erial **W**ire **D**ebug allows to access the STM32 Chip while running your VESC: Diagnostics, debugging and real time data.

- COMM : I2C, UART and ADC Interface to allow communication with other devices, such as Microcontrollers (e.g. Arduino, Raspberry Pi)) or using analog input devices (e.g. analog throttle)

- PPM: Connect input devices using **P**ulse-**P**osition **M**odulation e.g. a 2.4GHz transceiver for controlling the motors output power and speed (Radio control). Never connect one reciever to two or more VESCs in an array! Permanent damage may result from Y-PPM wiring!

- CAN: CAN BUS for interconnection of VESC in an array. E.g. when implementing traction control in a multi drive setup or when powering up multiple motors, using multiple VESCs (master + slave 1, 2, 3,....). CAN-bus is also a universal bus to link the VESC to other devices also featuring CAN-Bus. ONLY connect CAN L to CAN L and CAN H to CAN H. Do not interconnect 5V and GND in a VESC array! Permanent damage may result!

- Motor A,B,C Connectors for three phase wired BLDC Motors (Coil A, B, C). In most cases the motor wires can be plugged in randomly. If you know your motor phases plug in the phases accordingly (Yellow = A, Blue=B, Red=C) to be displayed correctly in the VESC-Tool real time data analysis.
DC-Motors use only connections **A** and **C**, B will be left unplugged!

- USB Micro USB-Port to connect to a computer for the purpose of configuration, firmware updates and real time data analysis.

Please visit *www.vesc-project.com/documentation* for more Information.

The following LED light Codes will be displayed by your VESC:

- BLUE: VESC is powerd up
- GREEN DIM: SW Running >> Software (Firmware) installed and running
- Green Bright: VESC is driving the motor.
- Red: Fault code, something is wrong! Read out the fault code in VESC-Tool.

Switch wiring

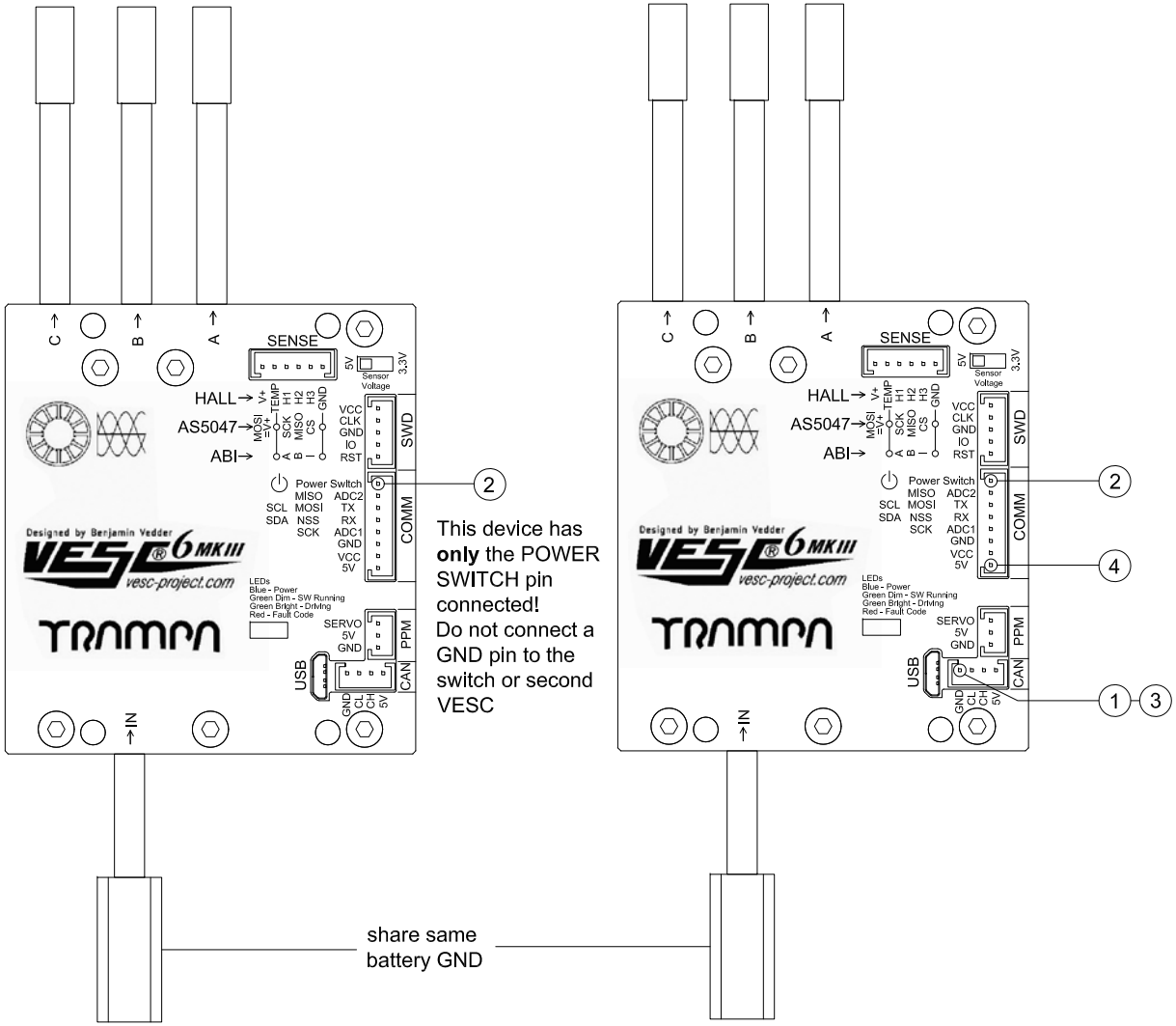

This device has **only** the POWER SWITCH pin connected!
Do not connect a GND pin to the switch or second VESC

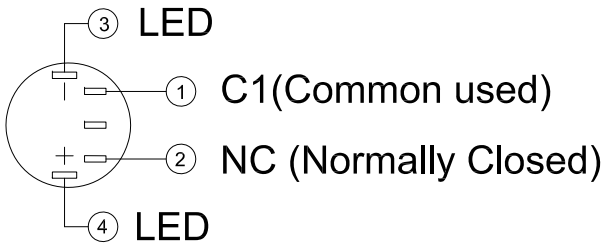

LED illuminated power switch

Activation of *roll to start* and *auto power off* using a simple wire bridge on each VESC

Technical Data Sheet

- Voltage: 6V – 60V (Safe for 3S to 12S LiPo).
  Voltage spikes may not exceed 60V!
- Current: Continuous 80-100A, Burst 120A. Values depend on the temperature and air circulation around the device!
- 5V 1A output for external electronics
- 3.3V 0,5A output for external electronics
- Modes: DC, BLDC, FOC (sinusoidal)
- Supported sensors: ABI, HALL, AS5047,TS5700N8501

Features

- Current and voltage measurement on all phases
- Regenerative braking
- Sensored or sensorless operation + hybrid mode
- Configurable RPM-, current-, voltage- and power limits
- Input source: PPM, Analog, NRF Nyko Kama Nunchuck
- Communication ports: USB, CAN, UART
- Throttle curve and ramping for all input sources
- Seamless 4-quadrant operation
- Motor revolution, amp hour, watt hour counting
- Real time data analysis and read out via communication ports
- Built in Power Switch (Hibernation)
- Roll to start, auto power off
- Adjustable protection against:
  - Low input voltage
  - High input voltage
  - High motor current
  - High input current
  - High regenerative braking current (separate limits for the motor and the input)
  - High RPM (separate limits for each direction).
  - Over tempertaure (MOSFET and motor)

Declaration of conformity (in accordance with ISO/IEC 17050-1)

Product: VESC 6.7
Item Number: #VESC 6.7

The object of declaration described above is in conformity with the requirements of the specifications listed below, following the provisions of the EMC Directive 2004/108/EC:

EN55011:2017-3
EN55022:2011-12
EN55024:2016-05
R&TTE 2014/53/EU
EN61800-3
LVD 72-23 / 93/68 EWG

Nottingham, 01.12.2019

Frank Drenckhahn

TRAMPA BOARDS LTD 2002 - 2016
Company Registration UK 4653504
Registered Business Address
Unit 17-19 Wilford Industrial Estate
Ruddington Lane, Wilford,
Nottinghamshire NG11 7EP
United Kingdom

This device is manufactured to meet the **RoHS2** (2011/65/EU) regulations.

Instructions for disposal of WEEE by users in the European Union
This product must not be disposed of with other waste. Instead, it is the user's responsibility to dispose of their waste equipment by handing it over to a designated collections point for the recycling of waste electrical and electronic equipment. The separate collection and recycling of your waste equipment at the time of disposal will help to conserve natural resources and ensure that it is recycled in a manner that protects human health and the environment. For more information about where you can drop off your waste equipment for recycling, please contact your local city office, your household waste disposal service or where you purchased the product.

FCC COMPLIANCE
This device complies with Part 15 of the FCC Rules. Operation is subject to the following two conditions: (1) this device may not cause harmful interference, and (2) this device must accept any interference received, including interference that may cause undesired operation.
NOTE
This equipment has been tested and found to comply with the limits for a Class B digital device, pursuant to part 15 of the FCC Rules. These limits are designed to provide reasonable protection against harmful interference in a residential installation. This equipment generates, uses and can radiate radio frequency energy and, if not installed and used in accordance with the instructions, may cause harmful interference to radio communications. However, there is no guarantee that interference will not occur in a particular installation. If this equipment does cause harmful interference to radio or television reception, which can be determined by turning the equipment o and on, the user is encouraged to try to correct the interference by one or more of the following measures:
→ Reorient or relocate the receiving antenna;
→ Increase the separation between the equipment and receiver;
→ Connect the equipment into an outlet on a circuit different from that to which the receiver is connected;
→ Consult the dealer or an experienced radio/ TV technician for help.
The following parties are responsible for the compliance of radio frequency equipment with the applicable standards: in the case of equipment subject to authorization under the verification procedure, the manufacturer or, in the case of imported equipment, the importer. If subsequent to manufacture and importation, the radio frequency equipment is modified by any party not working under the authority of the responsible party, the party performing the modification becomes the new responsible party.

Déclaration de conformité (conformément à la norme ISO/IEC17050-1)

Produit: VESC 6.7
Numéro(s) d'article: #VESC 6.7

L'objet de la déclaration décrit ci-dessus est en conformité avec les exigences des spécifications énumérées ci-après, suivant les conditions de la directive CEM 2004/108/EC:

EN55011:2017-3
EN55022:2011-12
EN55024:2016-05
R&TTE 2014/53/EU
EN61800-3
LVD 72-23 / 93/68 EWG

Nottingham, 01.12.2019

Frank Drenckhahn

TRAMPA BOARDS LTD 2002 - 2016
Company Registration UK 4653504
Registered Business Address
Unit 17-19 Wilford Industrial Estate
Ruddington Lane, Wilford,
Nottinghamshire NG11 7EP
United Kingdom

L'objet de la déclaration est en conformité avec la directive **RoHS 2** (2011/65/EU).

Elimination dans l'Union Européenne
Ce produit ne doit pas être éliminé avec les ordures ménagères. Il est de la responsabilité de l'utilisateur de remettre le produit à un point de collecte officiel des déchets d'équipements électriques. Cette procédure permet de garantir le respect de l'environnement et l'absence de sollicitation excessive des ressources naturelles. Elle protège de plus le bien-être de la communauté humaine. Pour plus d'informations quant aux lieux d'éliminations des déchets d'équipements électriques, vous pouvez contacter votre mairie ou le service local de traitement des ordures ménagères.

Konformitätserklärung laut Allgemeine Anforderungen (ISO/IEC 17050-1:2004, korrigierte Fassung 2007-06-15)

Produkt: VESC 6.7
Produktnummer: #VESC 6.7

Das Produkt entspricht den einschlägigen Bestimmungen des EMV-Richtlinie 2004/108/EC.:

EN55011:2017-3
EN55022:2011-12
EN55024:2016-05
R&TTE 2014/53/EU
EN61800-3
LVD 72-23 / 93/68 EWG

Nottingham, 01.12.2019

Frank Drenckhahn

TRAMPA BOARDS LTD 2002 - 2016
Company Registration UK 4653504
Registered Business Address
Unit 17-19 Wilford Industrial Estate
Ruddington Lane, Wilford,
Nottinghamshire NG11 7EP
United Kingdom

Diese Gerät wurde gemäß der Richtlinie **RoHS2** (2011/65/EU) hergestellt.

Anweisungen zur Entsorgung von Elektro—und Elektronik-Altgeräten für Benutzer in der Europäischen Union
Dieses Produkt darf nicht zusammen mit anderem Abfall entsorgt werden. Stattdessen ist der Benutzer dafür verantwortlich, unbrauchbare Geräte durch Abgabe bei einer speziellen Sammelstelle für das Recycling von unbrauchbaren elektrischen und elektronischen Geräten zu entsorgen. Die separate Sammlung und das Recycling von unbrauchbaren Geräten zum Zeitpunkt der Entsorgung hilft, natürliche Ressourcen zu bewahren und sicherzustellen, dass Geräte auf eine Weise wiederverwertet werden, bei der die menschliche Gesundheit und die Umwelt geschützt werden. Weitere Informationen dazu, wo sie unbrauchbare Geräte zum Recycling abgeben können, erhalten Sie bei lokalen Ämtern, bei der Müllabfuhr für Haushaltsmüll sowie dort, wo sie das Produkt gekauft haben.